Dewald slideout motors
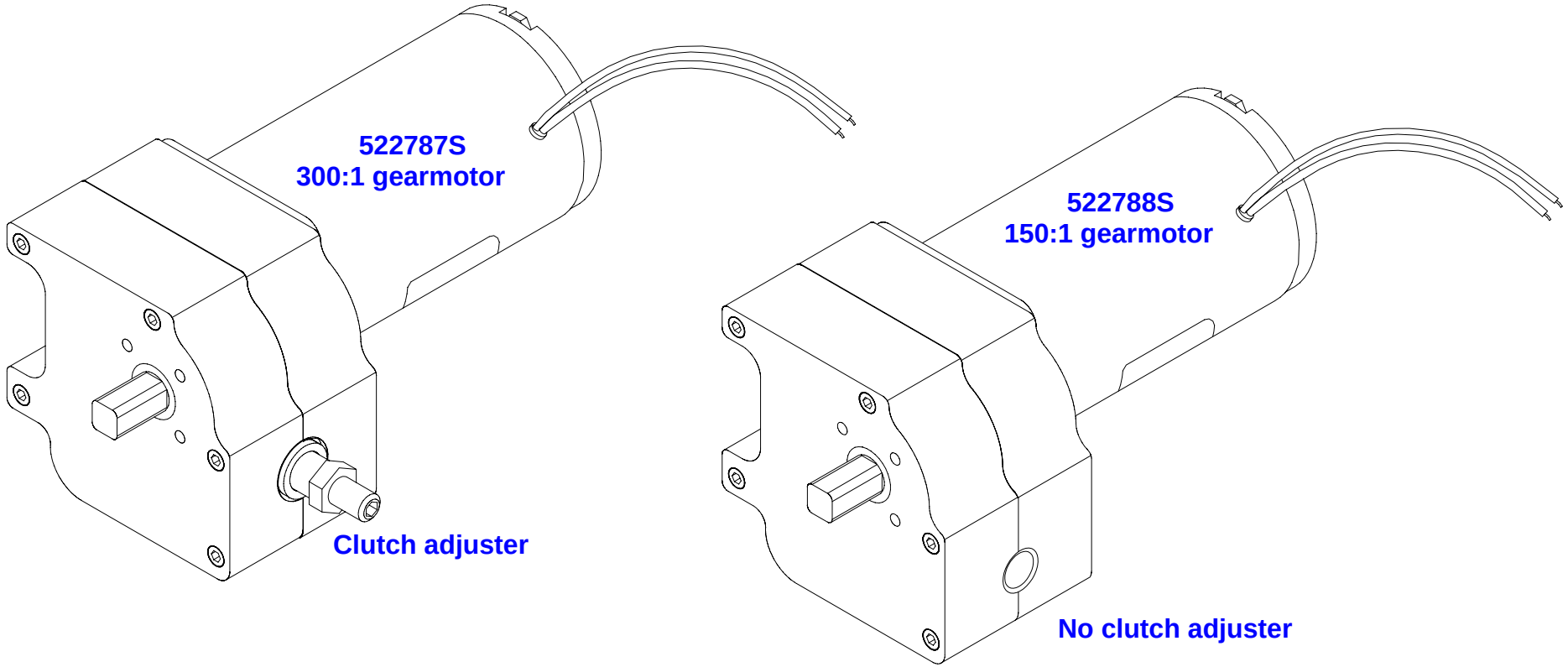
Electric Rack & Pinion Style
(not Hydraulic)