Replacement of the Hinge Components of the Interior Freezer Door

These instructions describe how to disassemble and assemble the hinge components of the freezer door for the models N260, N300,DE541/441, 442/443, 6052/6053 and the 652/653. These components are the freezer door hinge, the spring holder, the spring, and the spring pin. Use these instructions if you must replace any of these components.

Replacement Parts

Right hand door hinge	616329
Left hand door hinge	616330
Hex head screw	618227
Spring pin	619133
Right hand spring	619066
Left hand spring	619064
Right hand spring holder	616328
Left hand spring holder	616327

Disassembly

1. Remove the freezer door from the refrigerator:

   - Open the freezer door just enough to hold the edge of the door.

   NOTE: The door hinges are at the lower corners of the freezer door.

   - Locate the .125 inch round hole [1] in each door hinge [2] (See Art01087).

   - Hold the edge of the door and put a small rigid object (a screwdriver, punch, etc.) into the .125 inch hole on the same end of the door.

   - Gently pull out on the door and push into the .125 inch hole until the spring pin disengages from the door hinge.

   - Gently pull the freezer door off the door hinges and remove from the refrigerator.

2. If you must replace a freezer door hinge, remove either door hinge by removing the two hex head screws.

3. If you must replace a spring holder, a spring pin, or a spring, remove the spring holders from the refrigerator:

   - Push the top edge of each spring holder [3] toward the back of the refrigerator to disengage the locking tab [4] of the spring holder from the refrigerator cabinet (See Art01088).

   - Pull each spring holder toward the middle of the refrigerator to remove it from the refrigerator.

4. Remove the spring pins and springs from spring holders:

   - Squeeze together the cone-shaped tabs [5] of each spring pin [6] to disengage the spring pin from the spring holder (See Art01088 and Art01089).

   - Pull each spring pin and spring out of the spring holder.

5. If you must replace a spring, pull each spring off of the spring pin.

Assembly

1. Using two hex head screws, assemble each door hinge to the freezer door:

   - Make sure that the + shaped groove on each door hinge faces toward the outside of the refrigerator.

2. Identify the right hand and left hand springs and spring holders:

   - The right hand spring has red paint on one end and the left hand spring has no marking.

   - Put spring holders side-by-side so the door stop tabs [7] are opposite each other (See Art01092).

     - The right hand spring holder [8] is on the right.

3. Put the springs onto the spring pins:

   - Put the angled end [9] of each spring onto the spring pin first (See Art01091).

   - Push the angled end of each spring into the slot [10] of the spring pin (See Art01090).

4. Put the spring pins with springs into the spring holders.

   - Make sure that you put the spring pin with the right hand spring into the right hand spring holder.

   - Align the straight end of the spring with the notch [11] in each spring holder (See Art01089).

   - Push each spring pin with spring into the spring holder until you here the cone-shaped tabs on the spring pin engage the spring holder with a “snap” sound.

5. Put the spring holders into the refrigerator:

NOTE: As you face the front of the refrigerator, the right hand side is to your right.

   - Push each spring holder into the large hole in the refrigerator cabinet.

- Make sure that you put the right hand spring holder into the right hand side of the refrigerator cabinet.

- Turn each spring holder so that the end with the locking tab is toward the bottom of the refrigerator.

6. Put the freezer door onto spring holders:

- Hold the freezer door so it is horizontal and the inside of the freezer door is parallel with the bottom of the refrigerator (in the open position).

- Align the + shaped groove of one door hinge with the + shape of the spring pin that is on the same side.

- Gently push the door toward the spring pin and hold the door and spring pin in this position.

- Push the opposite spring pin in and gently push the door toward the spring pin until the + shape of the door hinge engages the + shaped groove of the spring pin.

NOTE: The spring holders will turn up toward as the freezer door closes.

- Close the freezer door.

- Turn each spring holder up so the locking tab is against the refrigerator cabinet.

- Slightly bend each spring holder toward the freezer door so the locking tab will slide by the refrigerator cabinet.

- Continue to turn each spring holder until the locking tab of the spring holder engages the hole in the refrigerator cabinet.

- Open the freezer door to make sure that the locking tab of each spring holder stays engaged in the refrigerator cabinet.

Door Seal

If the door does not seal correctly, excess frost will collect inside the refrigerator. Make sure the door seals correctly:

- Close the door on a piece of paper that is about the size of a dollar bill (See Art00980).

- Gently pull the paper.

  - You should feel a slight drag between the gasket and the cabinet.

  - Do this on all four sides of the door.

  - If you do not feel a slight drag on the paper, the door is not sealing correctly.

    - Do Assembly Steps 5 and 6 again to make sure the springs are at the correct tension.
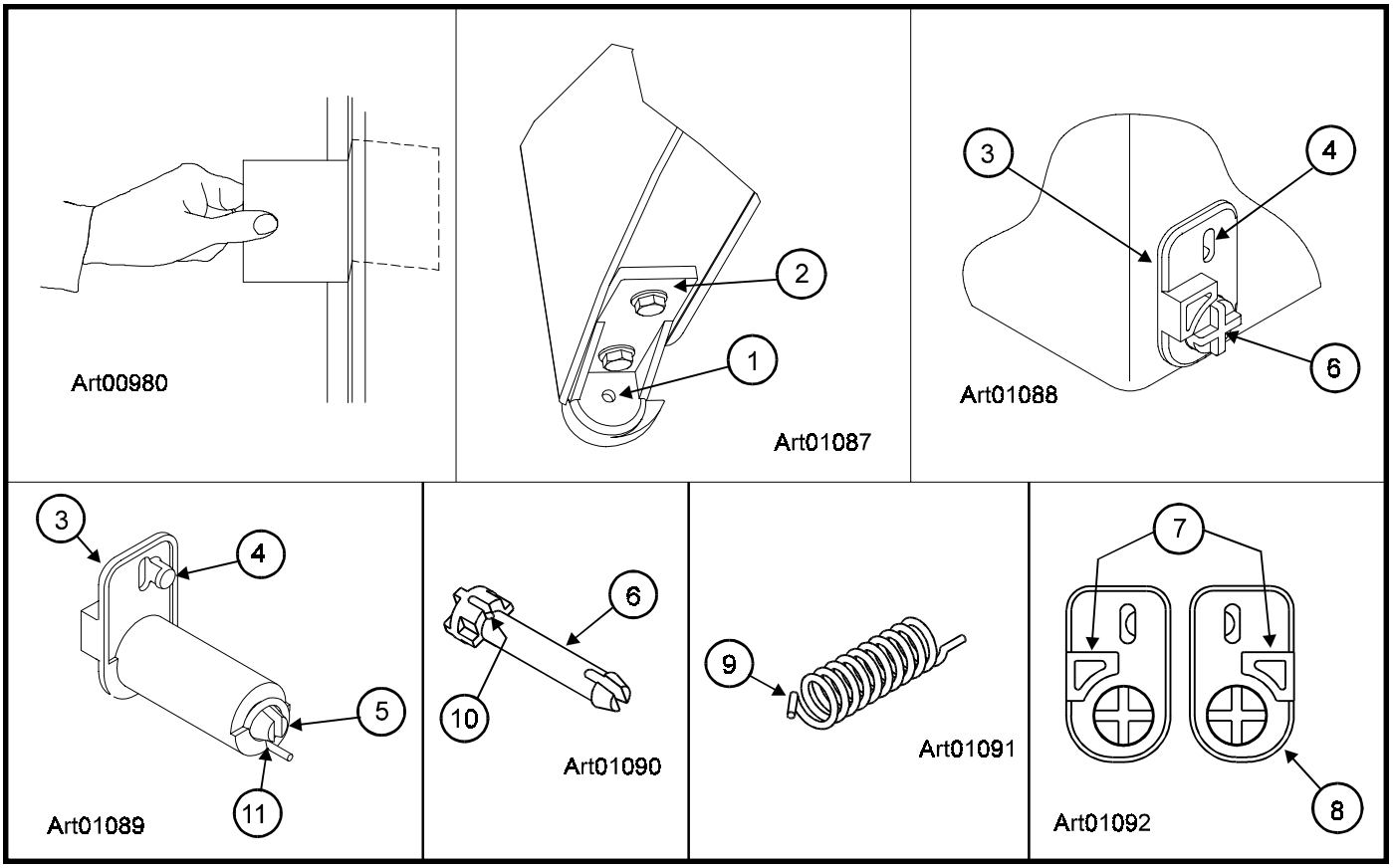
    - Make sure the gasket is not damaged/