CIRCUIT DIAGRAM OF REFRIGERATOR MODEL: DE-828
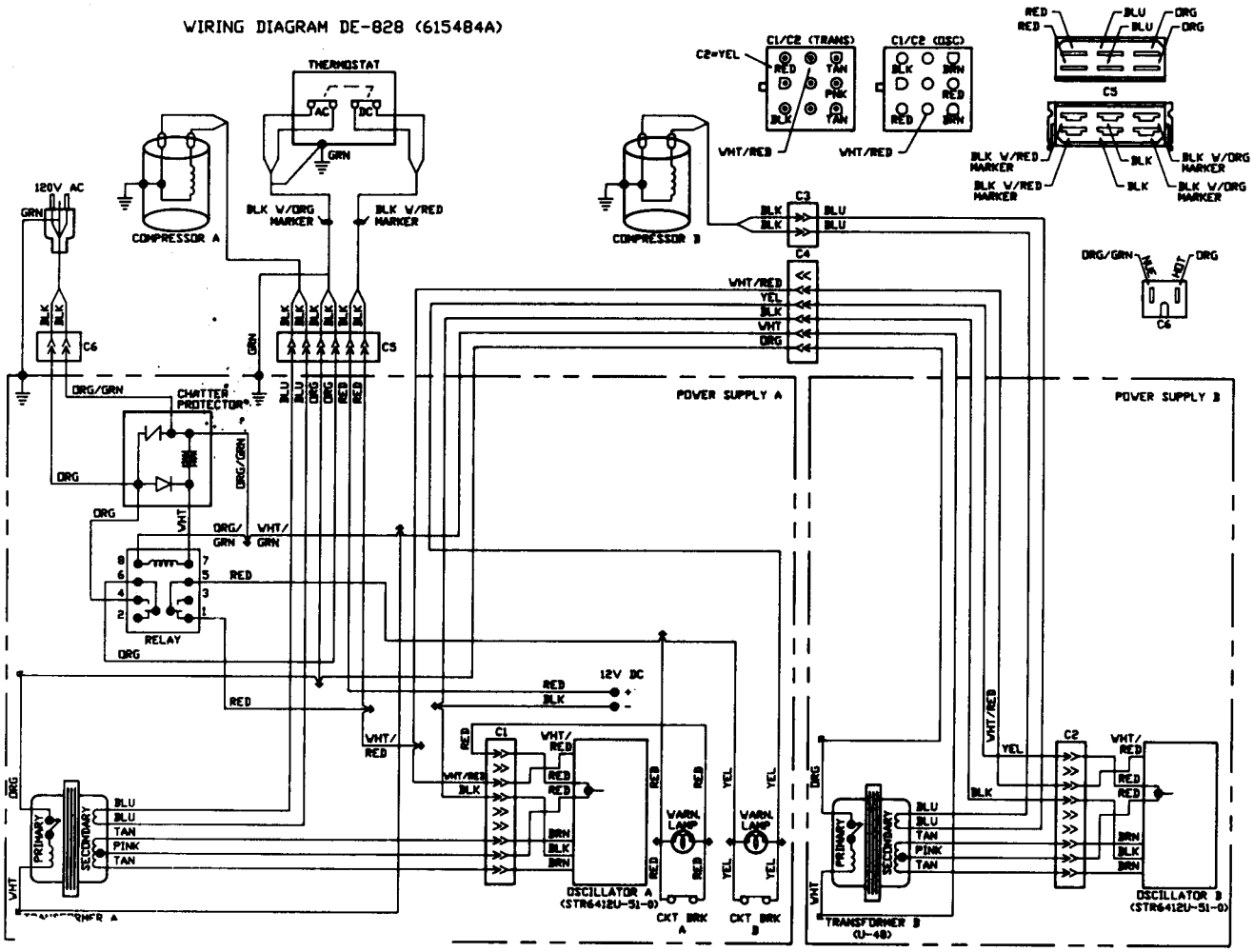
POWER SUPPLY: 615501A, 615501B
OSCILLATOR ASSEMBLY: STR6412U-51-0
TRANSFORMER ASSEMBLY: U-48