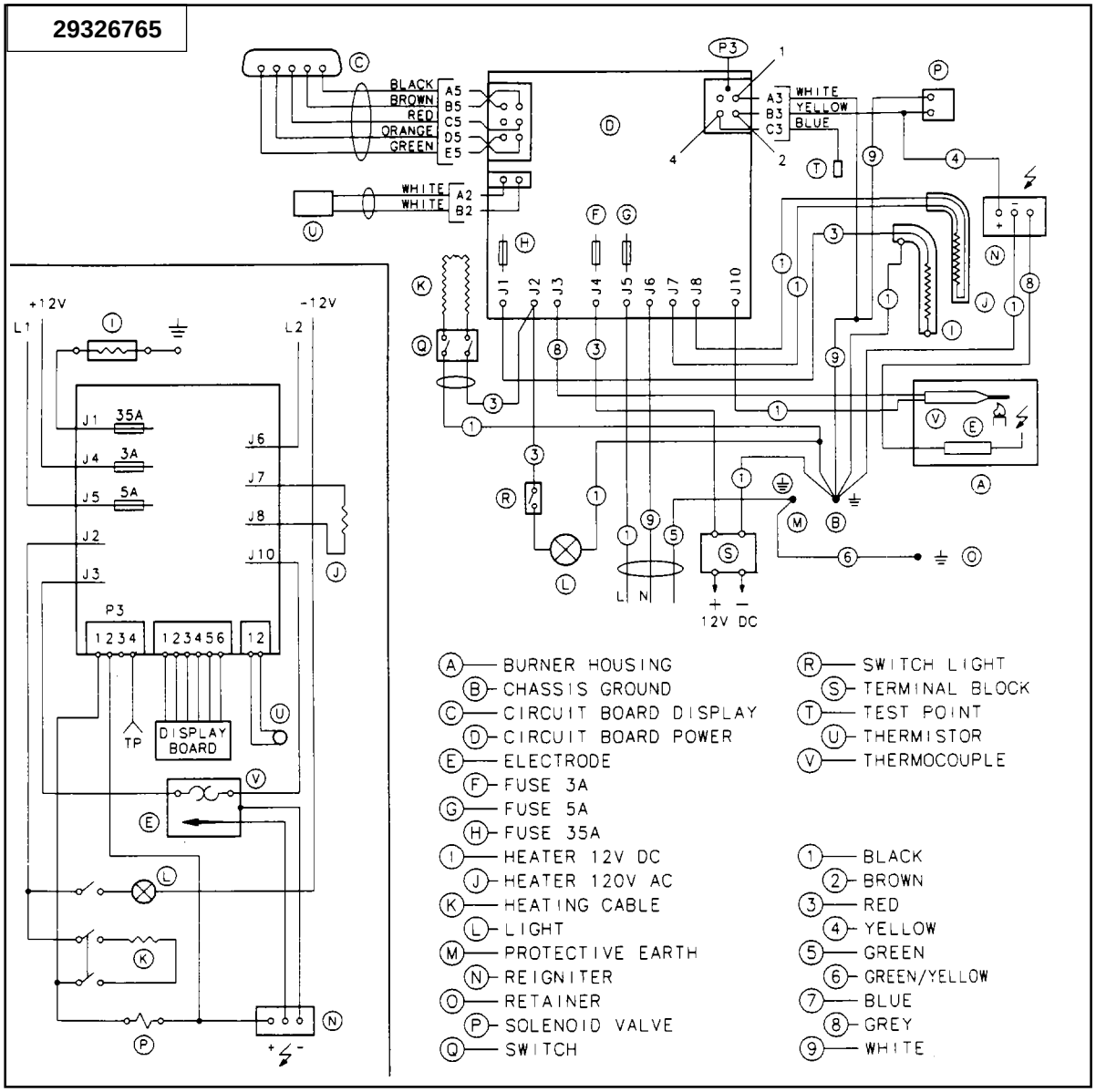WIRING DIAGRAM
FOR RM3663 3-WAY MODELS)
Prod. No. 921144010 & 921144012