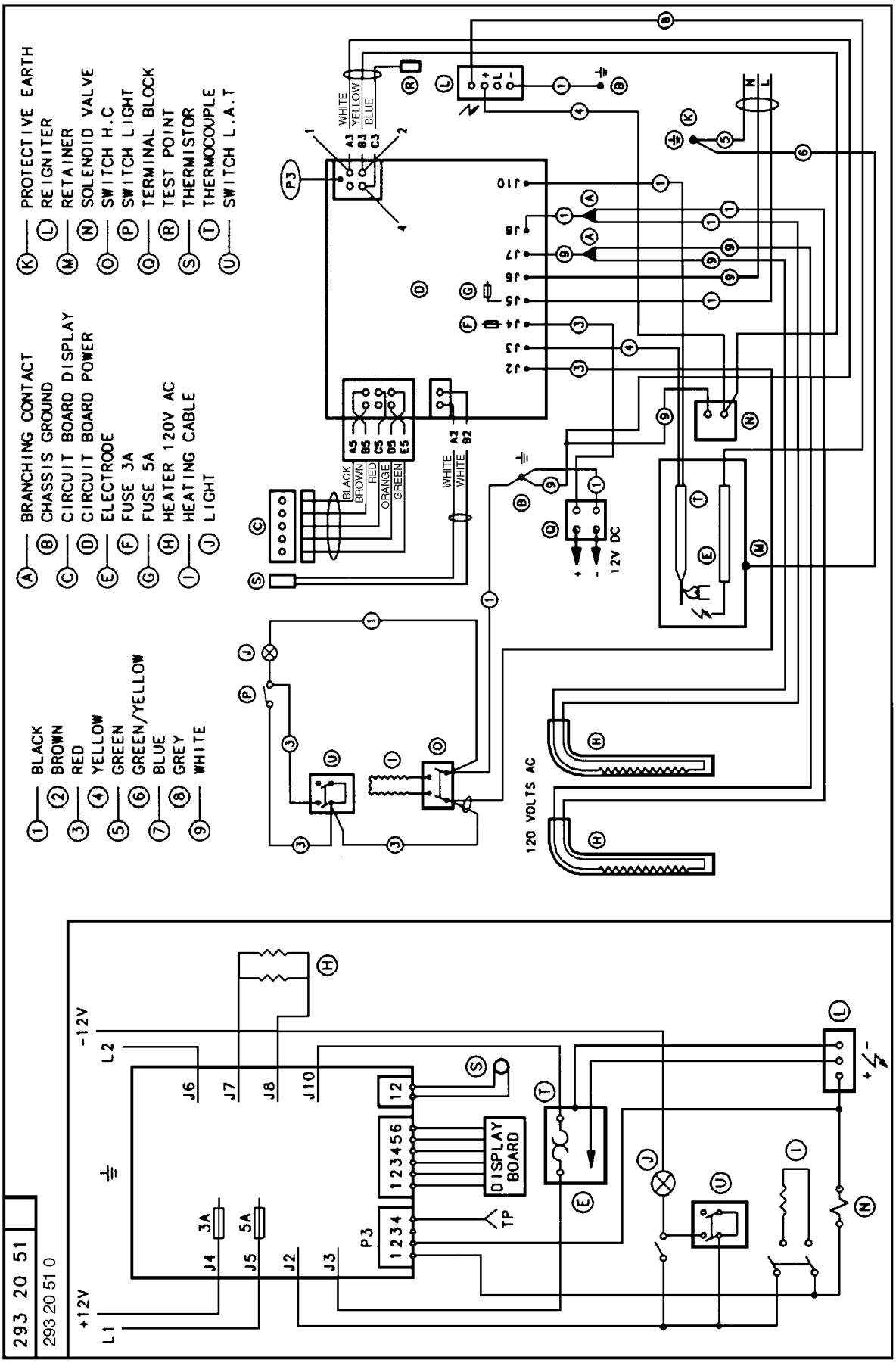
293 20 51
293 20 51 0
+12V
L1
-12V
L2
3A
5A
J4
J5
J2
J3
J6
J7
J8
J10
P3
1234
123456
DISPLAY BOARD
TP
12V DC
120 VOLTS AC
WHITE
YELLOW
BLUE
BLACK
BROWN
RED
ORANGE
GREEN
WHITE
WHITE
A5 B5 C5 D5 E5
A2 B2
A3 B3 C3
J10 J9 J8 J7 J6 J5 J4 J3 J2 J1
N
L
A — BRANCHING CONTACT
B — CHASSIS GROUND
C — CIRCUIT BOARD DISPLAY
D — CIRCUIT BOARD POWER
E — ELECTRODE
F — FUSE 3A
G — FUSE 5A
H — HEATER 120V AC
I — HEATING CABLE
J — LIGHT
K — PROTECTIVE EARTH
L — REIGNITER
M — RETAINER
N — SOLENOID VALVE
O — SWITCH H.C
P — SWITCH LIGHT
Q — TERMINAL BLOCK
R — TEST POINT
S — THERMISTOR
T — THERMOCOUPLE
U — SWITCH L.A.T
1 — BLACK
2 — BROWN
3 — RED
4 — YELLOW
5 — GREEN
6 — GREEN/YELLOW
7 — BLUE
8 — GREY
9 — WHITE